EXECUTION	∅ STEM
AE	[0,31] 8
AI	[0,25] 6,4
AM	[0,24] 6
A3B	[0,38] 9,5

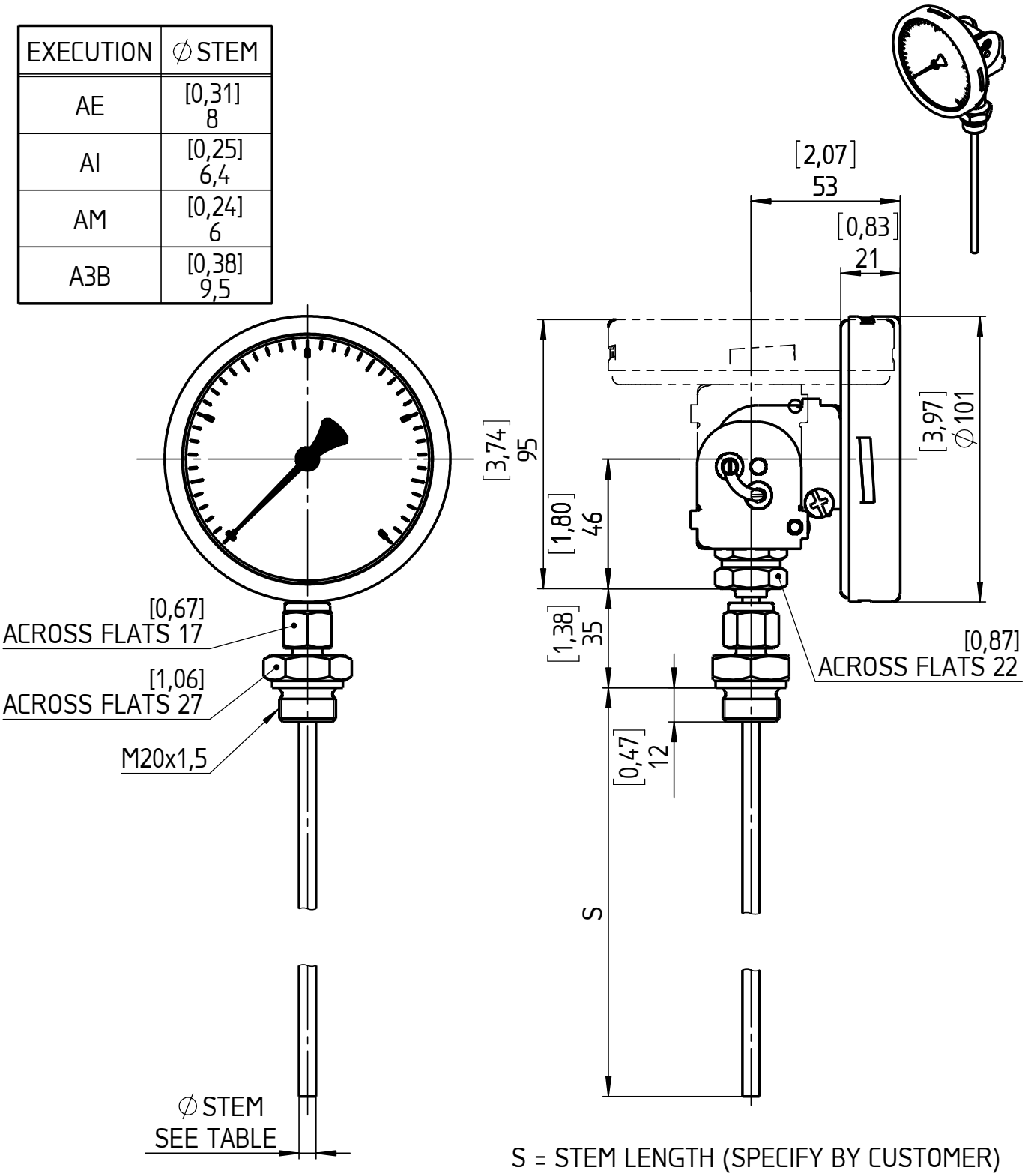

S = STEM LENGTH (SPECIFY BY CUSTOMER)

All specifications are subject to change without notice.

Rev.	Description	Date	Na.

	Date	Name
Drawn	27.02.18	J. Krott
Checked	27.02.18	Th. Wel

ASHCROFT®

Dimensions in mm [inch]

General Dimension Bimetal, NG100, A, Every Angle, 090

DWG. NO.
A 076 I 2-NG100A-E-090