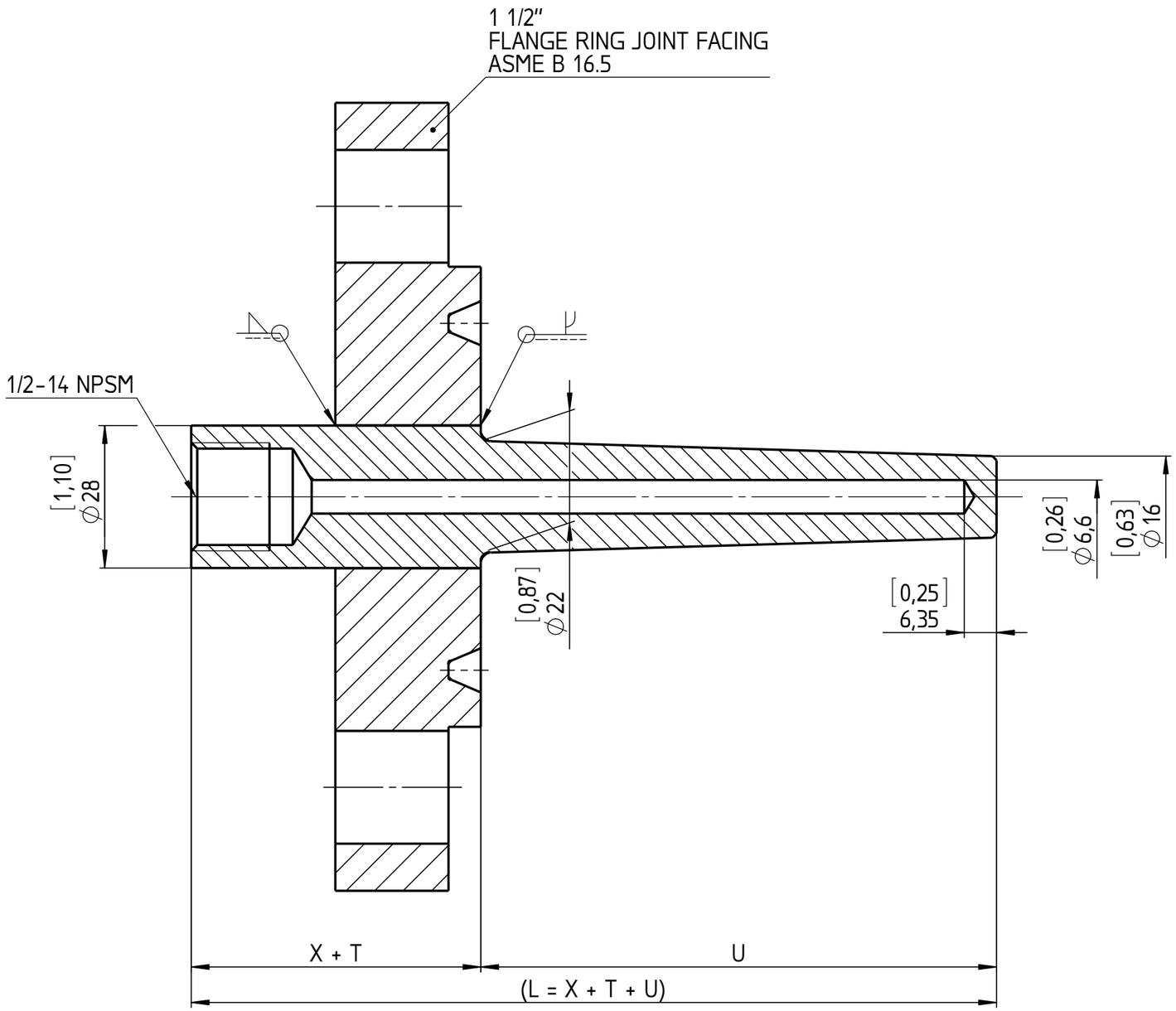

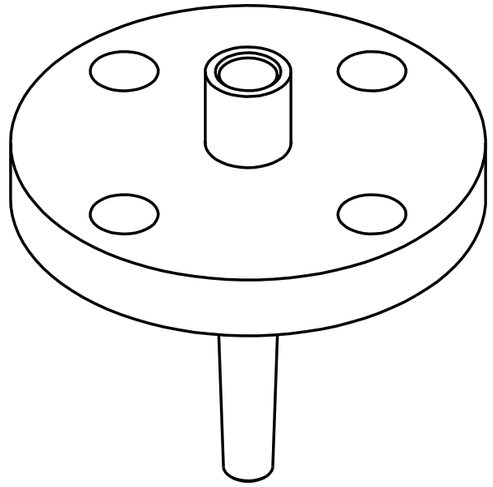

U-LENGTH (SPECIFY BY CUSTOMER)
T-LENGTH (SPECIFY BY CUSTOMER)

lb/sq. in.	X
150	[2,24] 57
300	
600	
900/1500	
2500	[2,76] 70

This drawing includes confidential information which is the property of ASHCROFT INC. This copy is loaned for a specific purpose, with the understanding that it will not be reproduced or used for any other purpose or disclosed to others, and it will be returned on demand.

Rev.	Description	Date	Na.
A	Added dimensions in Inch	14.05.12	Krott

	Date	Name
Drawn	28.03.12	J. Krott
Checked	15.05.12	Th. Weil

ASHCROFT®

Dimensions in mm [inch]

General Dimension
Thermowell, HF, 260, 1 1/2" Flange Ring Joint Facings

DWG. NO.
B 076 I 2-HF-15-260-RTJ

All specifications are subject to change without notice.