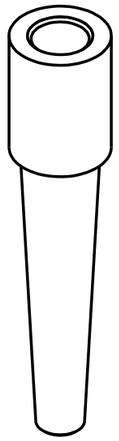

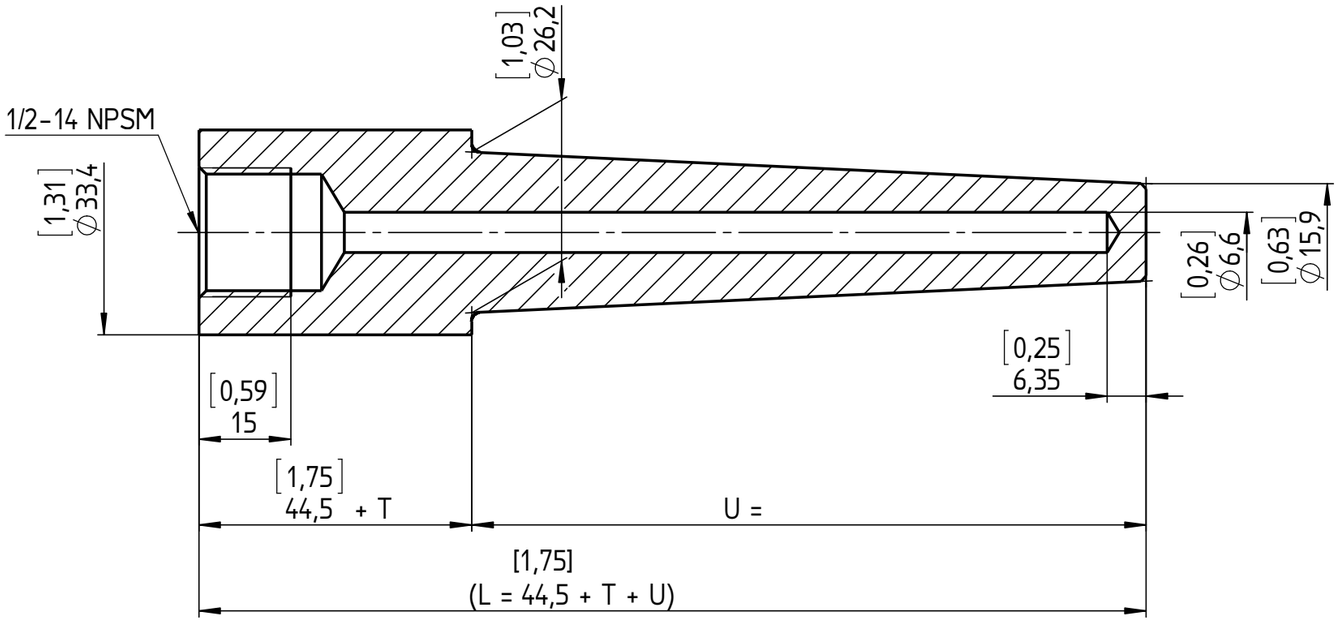

U-LENGTH (SPECIFY BY CUSTOMER)
T-LENGTH (SPECIFY BY CUSTOMER)

Rev.	Description	Date	Na.

	Date	Name
Drawn	30.06.14	J. Krott
Checked	30.06.14	Th. Wal

ASHCROFT®

Dimensions in mm [inch]

General Dimension Thermowell, HS, 260

DWG. NO.
B 076 I 2-HS-10-260

All specifications are subject to change without notice.