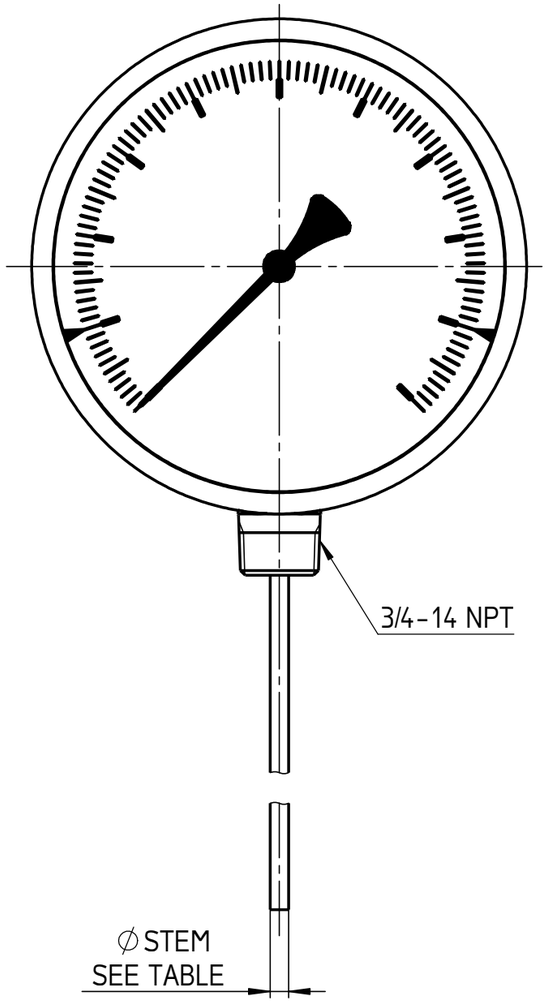

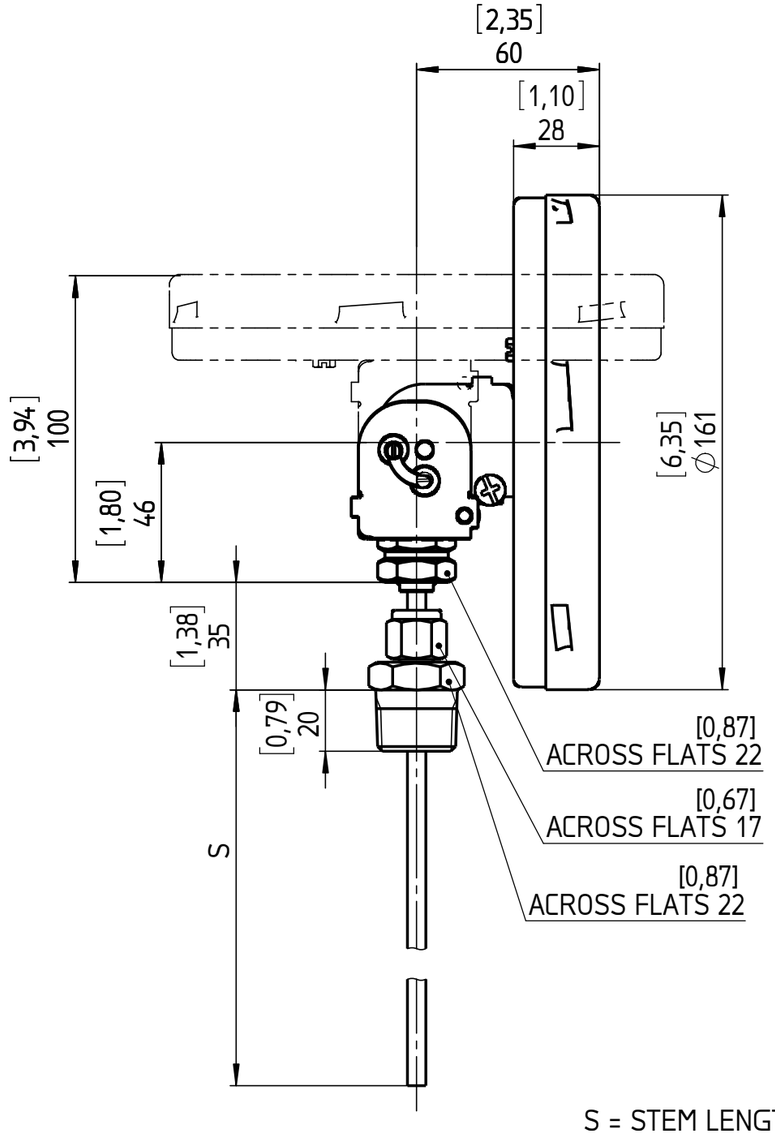

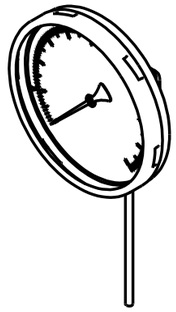

S = STEM LENGTH (SPECIFY BY CUSTOMER)

EXECUTION	∅STEM
AE	[0,31] 8
AI	[0,25] 6,4
AM	[0,24] 6
A3B	[0,38] 9,5

Rev.	Description	Date	Na.

	Date	Name
Drawn	10.11.16	J. Krott
Checked	10.11.16	

ASHCROFT

Dimensions in mm [inch]

General Dimension Bimetal, NG160, A, Every Angle, 072

DWG. NO.
B 076 I 2-NG160A-E-072

All specifications are subject to change without notice.