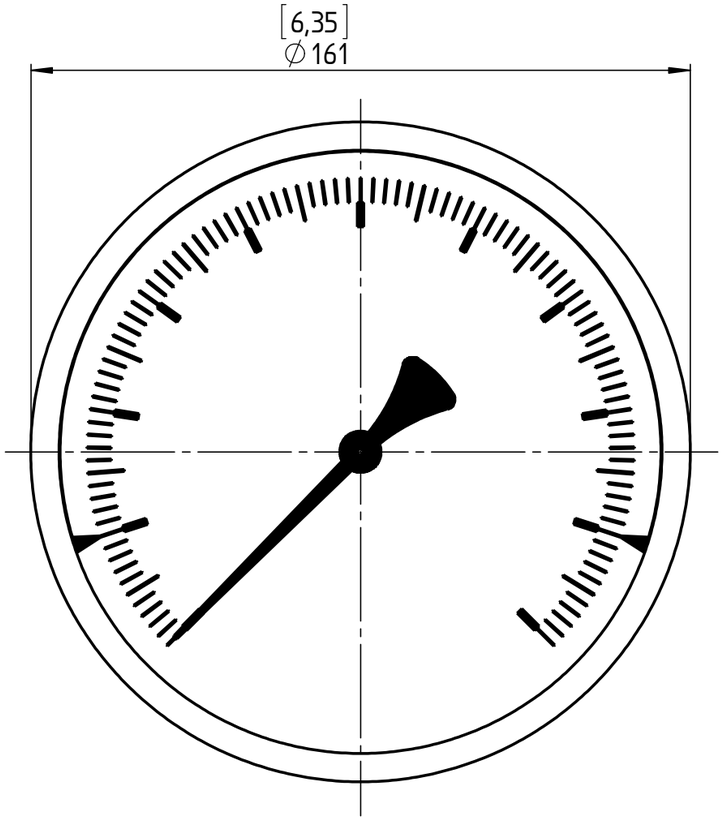

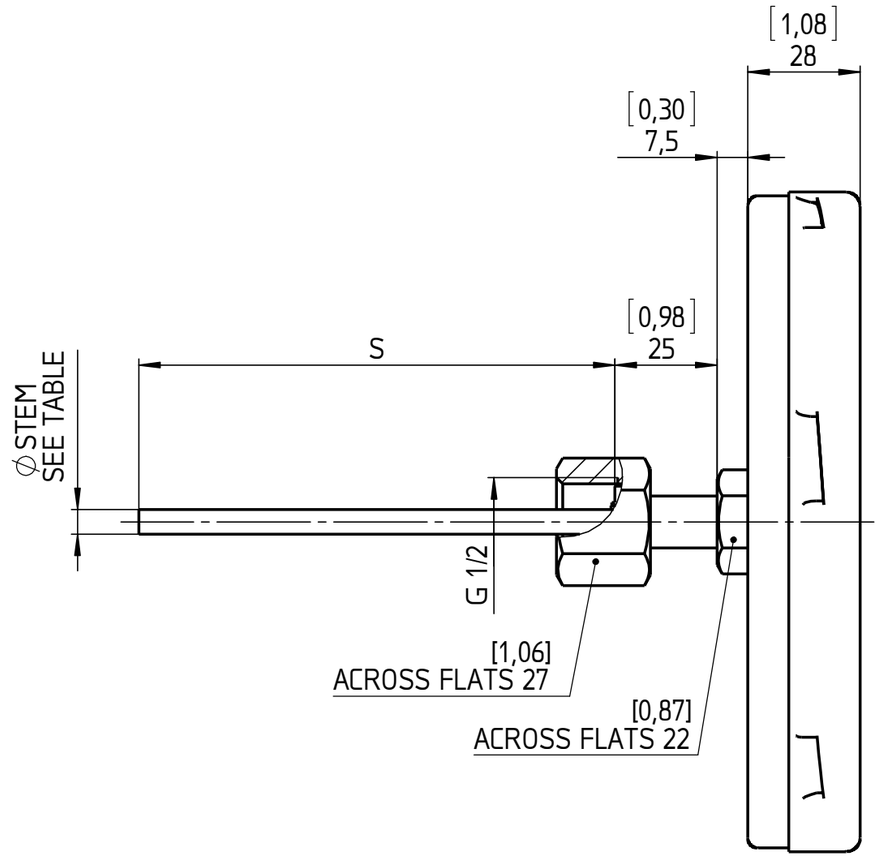

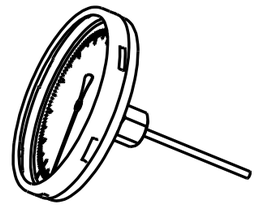

EXECUTION	∅STEM
AE	[0,31] 8
AI	[0,25] 6,4
AM	[0,24] 6
A3B	[0,38] 9,5

S = STEM LENGTH (SPECIFY BY CUSTOMER)

Rev.	Description	Date	Na.

	Date	Name
Drawn	11.03.15	J. Krott
Checked	13.03.15	Th. Wel

ASHCROFT

Dimensions in mm [inch]

General Dimension
Bimetal, NG160, A, Back, 081

DWG. NO.
B 076 I 2-NG160A-R-081

All specifications are subject to change without notice.