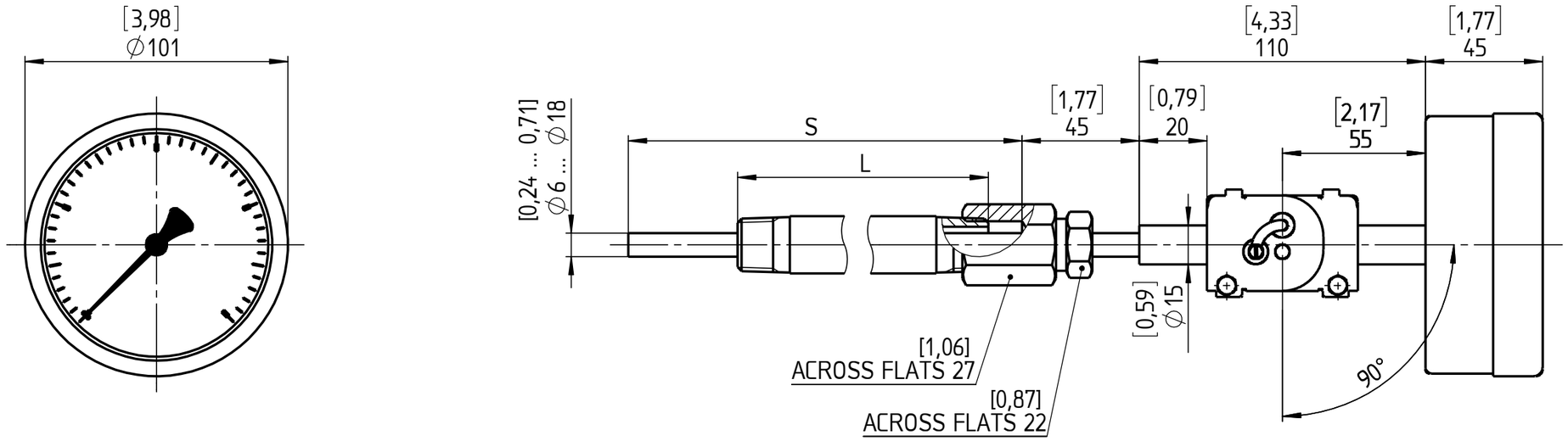

S = STEM LENGTH (SPECIFY BY CUSTOMER)
L = CONNECTION LENGTH (SPECIFY BY CUSTOMER)

Rev.	Description	Date	Na.

	Date	Name
Drawn	27.08.18	J. Krott
Checked	27.08.18	Th. Wel

ASHCROFT®

Dimensions in mm [inch]

General Dimension
S5500, NG100, knee joint 360°, CS3, 074, EN

DWG. NO. B 076 I 2-S5500-NG100-E2-CS3-074-EN