Third angle projection

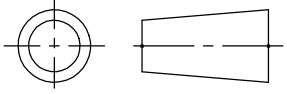

ASHCROFT® INC.
250 EAST MAIN STREET
STRATFORD, CT 06614

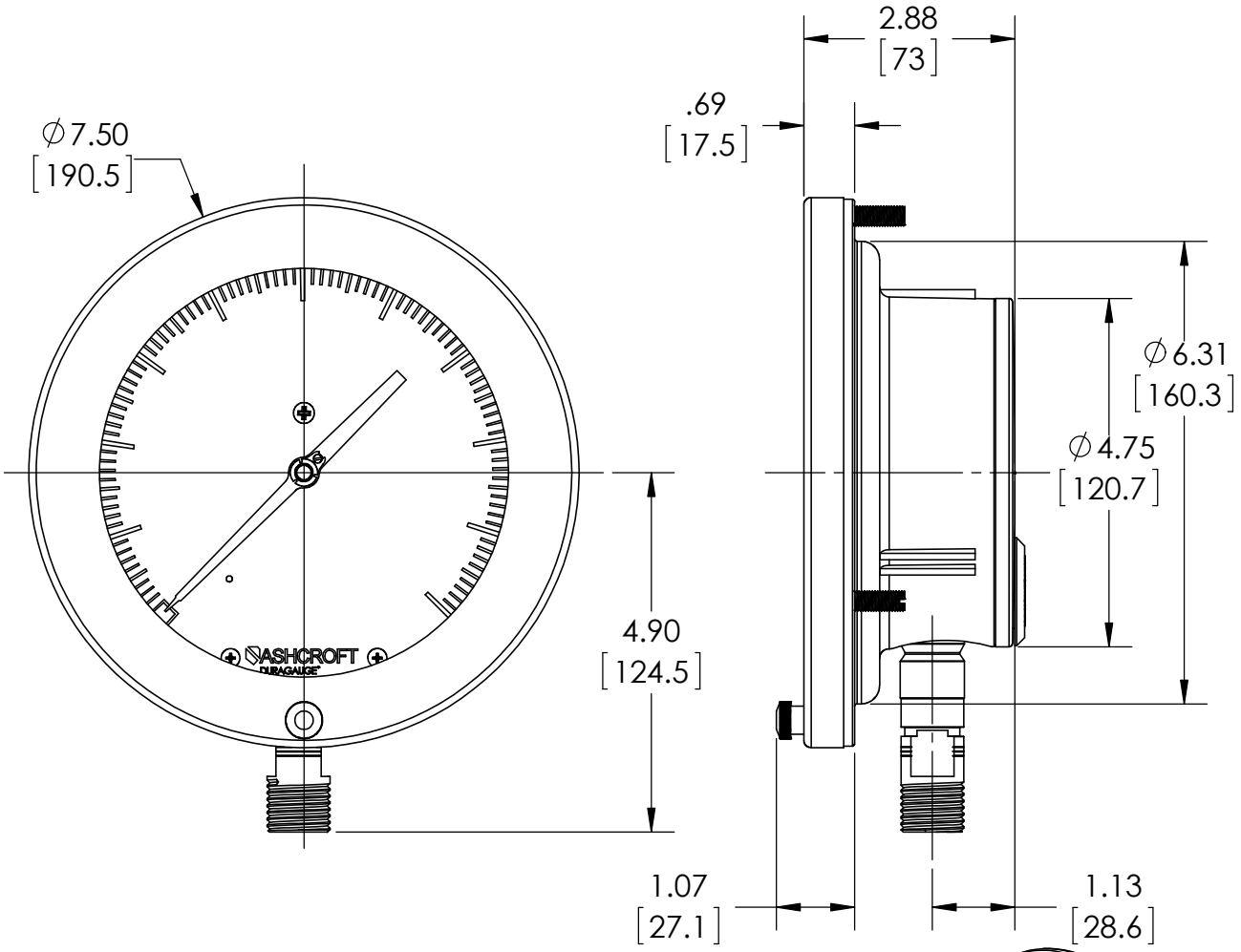

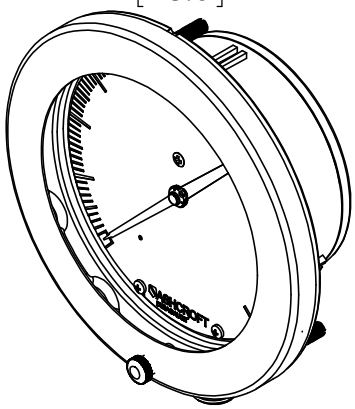

Note: 3 Mounting studs threaded equally spaced on a 7" [178] Bolt Circle.

DIMENSIONS IN [ ] ARE MILLIMETERS

REV.	ECO	DESCRIPTION	BY	DATE
A	0004455	RELEASED GENERAL DIMS. FOR 60 1377 04L	MJS	5/26/2010
B	0005457	Validation of Dimensions	MJS	2/17/2012

This print certified correct for		General Dimensions			
Customer's Name		60 1377 04L SERIES			
		HINGED RING DURAGAUGE			
Customer's Order No.		Drawn MJS	Date 5/26/10	Date of Issue	
Ashcroft Order No.		Checked	Date	SHEET-1	Rev.
Certified by	Date	Approved	Date	70A3021	B